ISSUE	MODIFY DESCRIPTION	DATE
A	First Issue	08.07.22

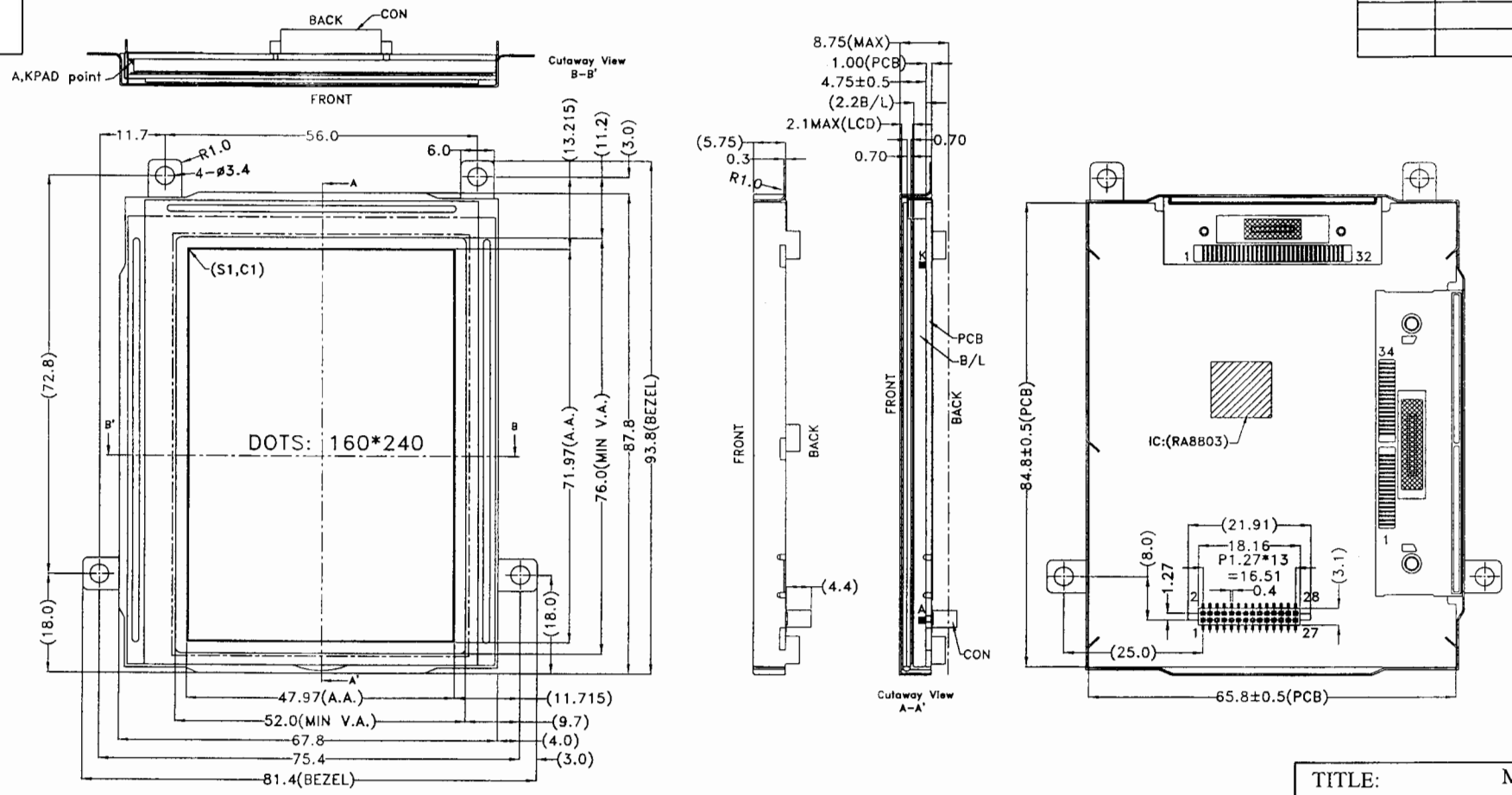

Display Type	FSTN / TRANSFLECTIVE / POSITIVE
Display Resolution	DOTS:160*240
Viewing Angle	12:00
Max.Ratio and Bias Level	1/240 DUTY,1/13 BIAS
LCD Controller/Driver	RA8803(SMT)+IST3225TA0+IST3226TA0(TAB)
Logic Voltage	5.0V
LCD Driving Voltage	TBD
Operation Temperature	-20° C TO 70° C
Storage Temperature	-30° C TO 80° C
Backlight Speciality	LED SIDE(BLUE), 6 PCS LED dies Vf=4.0± 0.3V
Remark	

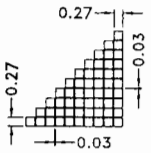

Scale:5/1
Detail:DOTS

CON ASSIGNMENT:

1	D0	15	NC
2	D1	16	/CS
3	D2	17	/WR
4	D3	18	/RD
5	D4	19	RS
6	D5	20	BUSY
7	D6	21	RST
8	D7	22	VSS
9	NC	23	VDD
10	NC	24	V0
11	NC	25	VEE
12	NC	26	VSS
13	NC	27	A
14	NC	28	K

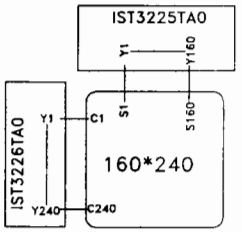

受控文件

GEI LCD

TITLE:	Module Speciality
ITEM NO:	M1928(T02)
PROJECT NO:	JCG160240A03-01
DESCRIPTION:	FFPL2BHET-12-RA/IST-NSC

◇: Special characteristic ▽ : Critical dimension
+: Safety characteristic (...): Reference dimension
Tolerance unless:x.x± 0.3 Otherwise specified:x.xx± 0.2

THIRD ANGLE PROJECTION

	NAME	SIGN	DATE
DRAWN	Luo chui zhan		08.07.22
CHECKED	Lan li juan		08.7.22
CHECKED	Li shen jun		08.7.24
APPROVED	Wang zhao cai		08.7.24
REV: A	UNIT: mm	SCALE:1/1	SHEET: 1 OF 1