	H	H1
LED底背光	8.9	13.5±0.5
侧背光	6.9	11.5±0.5
无背光	4.6	9.2±0.5

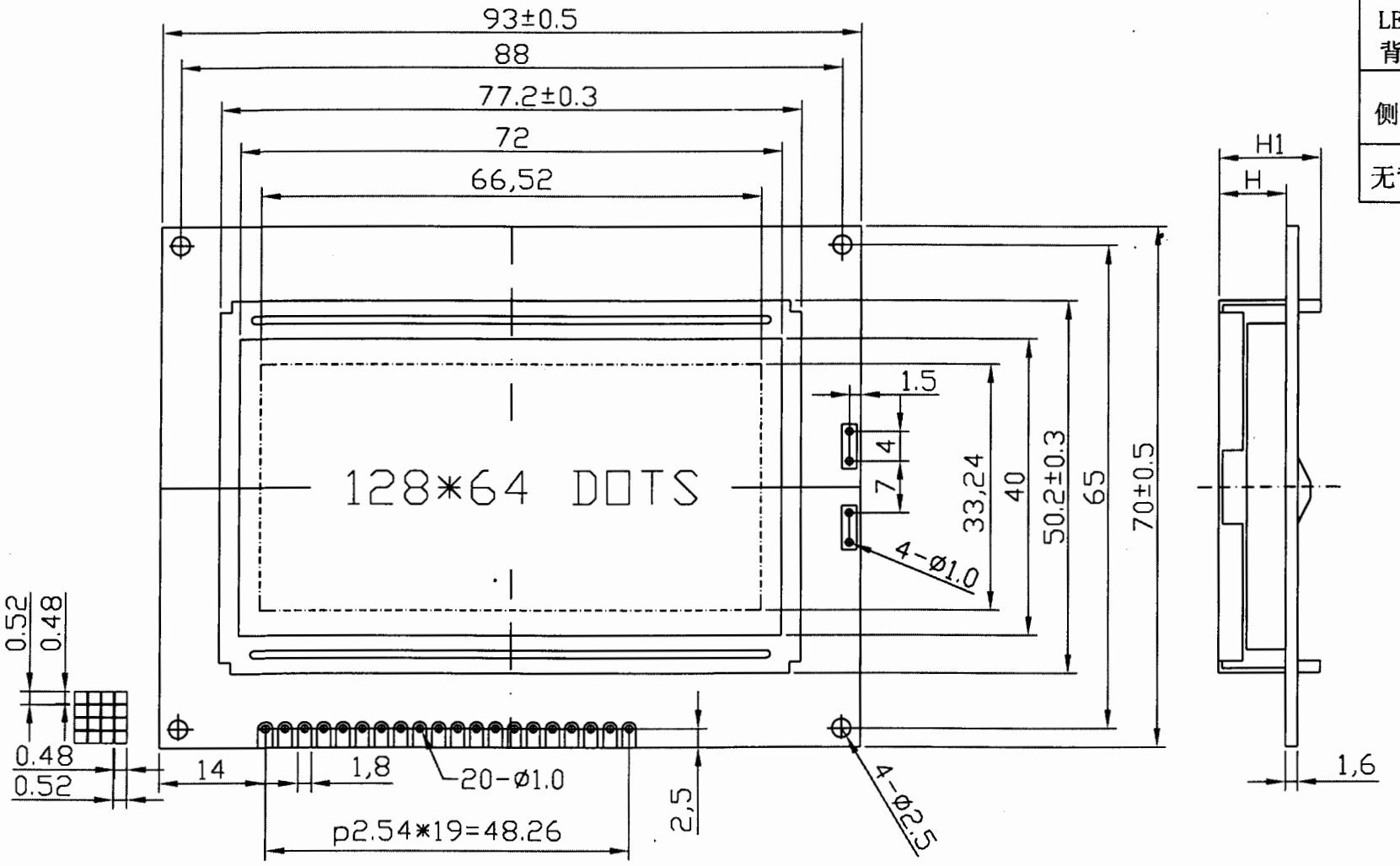

1	2	3	4	5	6	7	8	9	10	11	12	13	14	15	16	17	18	19	20
VSS	VDD	VEE	D/I	R/W	E	DB0	DB1	DB2	DB3	DB4	DB5	DB6	DB7	CS1	CS2	RST	VOUT	A	K

生效
设计二室

LCD MODULE	M0343	REV	C
GEI LCD			
DRAWN BY: 韩小彦 03.7.23	TYPE: JCM12864E	SCALE: ✓	
CHECKED BY: 12 03.7.29	NUMBER: JMK5	UNIT: MM	
APPROVED BY:	DRAWING NO: REV C-1		
	SHEET 1 OF 1		